High Performing Undercounter and Hood Type Dishwashers

Electrolux

The intelligent generation...

• WT30E and WT65E are ideal solutions for demanding customers looking for high performing dishwashers. Perfect for cleaning plates, cups, utensils, trays, gastronorm containers and cutlery. They are also ideal for washing glassware.

• Flexible and ergonomic to operate, as well as offering the maximum in sanitisation and washing results, the Electrolux promise is to provide a reliable dishwashing operation with low running costs.

...sets the standards

Sanitisation and Hygiene

- Rinsing at a constant temperature above 82,5 °C
- Long 16" rinse cycle
- 4 litre fresh hot rinse water per rack
- Optimized rinse water pressure independent of mains network
- Boiler drain down facility
- Wash area with round corners and no internal pipes

State of the art electronics

- HACCP digital display of precise wash and rinse water temperatures
- Soft-touch low voltage control panel.

Flexibility

- On-site personalisation of washing and rinsing cycle times
- On-site personalisation of washing and rinsing temperatures
- Pre-arrangement to accept internal and external dosing equipment
- Quick fit external connection box
- On-site conversion of electrical phases

Performance

- Powerful wash pumps ensure brilliantly clean crockery
- Large wash tanks for full washing session
- Fast initial heat-up times
- Delicate item "soft-start" feature

Ergonomics

- Easy open counterbalanced door
- Sound deadening insulation
- Audible and visual messages

Reliability

- Main components in heavy duty 304 AISI stainless steel
- IPX5 and IPX4 water protection
- Auto diagnostic electronic control

Safety and Hygiene

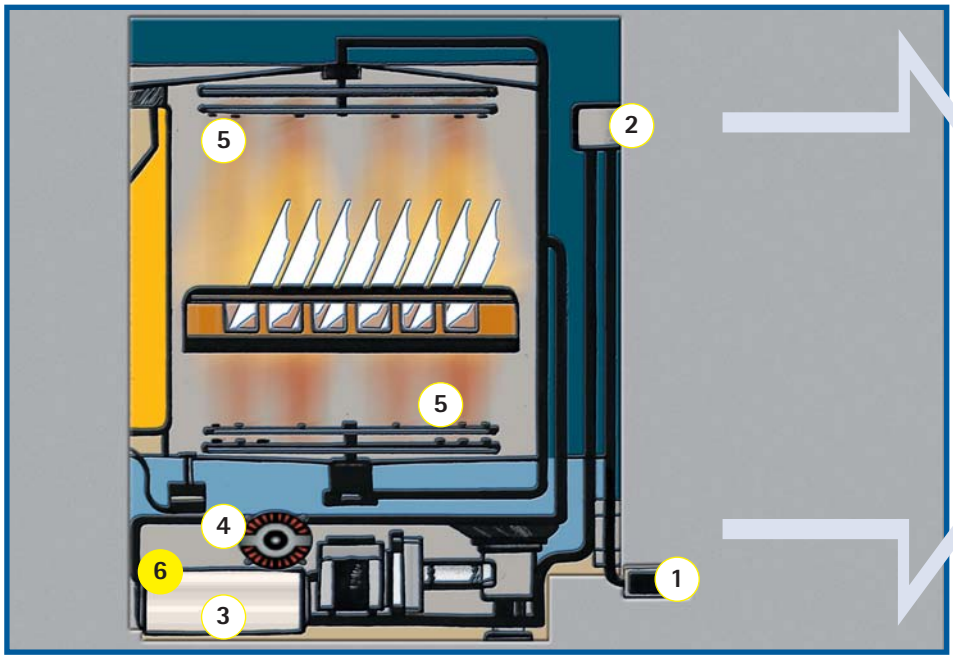

Rinsing

1. Solenoid valve allows water to enter the machine and is closed during rinsing

2. Air-break ensures protection of mains water and compliance with strictest hygiene regulations

3. 12 litre atmospheric boiler provides a large quantity of hot water at a constant temperature

4. Rinse Booster Pump pushes water at constant high pressure, irrespective of incoming water mains pressure

5. Rinsing arms spray water at all angles to completely remove detergent remains

6. Waiting device ensures rinsing starts only when water is at the correct temperature

- WT30E and WT65E share the same tried and tested atmospheric rinsing system
- Atmospheric boiler coupled with the rinse booster pump ensures strong rinsing water pressure even where water mains pressure is low (min 0.5 bar)
- 16" rinse cycle that can be increased on-site
- 4 litre fresh hot water per rack
- Rinsing circuit dimensioned to sanitise all washed items at a constant temperature above 82,5 °C
- Internal wash area with round corners and no pipes
- Fully automatic self-cleaning cycle sanitises washing chamber with hot water after use
- Electronic control panel pre-arranged for HACCP monitoring equipment such as computers and printers

• Atmospheric boiler

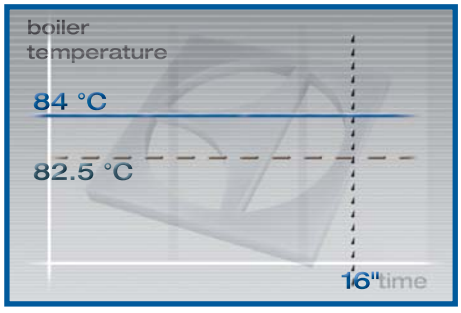

Constant rinsing conditions:
84 °C at high pressure ensures excellent sanitization

Independent from the external water pressure:
strong pressure is created to completely remove detergent from every item

Energy savings: lower running cost

medical-*line*

HYGIENICUM®
INSTITUT FÜR MIKROBIOLOGIE & HYGIENE-CONSULTING GMBH

CERTIFICATE

Hygienicum®, hereby certifies that **Electrolux Professional undercounter dishwashers WT30/MED**, with each wash cycle, provide a temperature of **85 °C for 30 seconds measured on all items in the basket**.

The tests performed were to verify cleaning & disinfection efficiency.
One of these tests is a modified version of the **Koller test prodecure**, using a heat resistant *Enterococcus faecium*, which is **resistant up to 70 °C for 10 minutes. The statistical evaluation** of the test is based upon **DIN 44 990 and DIN 10 510 methods**.

Test results
The tests performed were to verify cleaning & disinfection efficiency. After **5 tests**, the cleaning efficiency was high with a score of **4,86 out of a possible 5**, well within the acceptable tolerance limit of ± 0,2.
The disinfection test used skim and pick-off tests from tha crockery & cutlery that showed that **no bacteria were present**, even when no detergent was used. Even if there was some soil residue remaining, bacteria was not present.

Tests also involved an analysis of the **wash water in the tank**, the side walls & nozzles, after the washing cycle had been performed. The result was that there was a significant **reduction in bacteria**, proving that **WT30/MED** provides **effective disinfection**, not only of the items washed, but of the **wash tank**.

Dr. Michael Stehl
director of the institute
authorised expert in food hygiene an microbiology

HYGIENICUM® Institut für Mikrobiologie und Hygiene-Consulting GmbH
A - 8045 Graz, Andritzer Reichsstrasse 44, Telefon: +43316/689 41 08, Fax: +43316/689 41 25, E-mail: office@hygienicum.at, www.hygienicum.at

To face safety concerns in hospitals regarding infectious germs, Electrolux's answer to this problem is the medical-*line*; a tailored range of dishwashers designed to meet demanding hospital rinsing requirements of 85 °C for 30 seconds measured on all items in the basket (not just in the boiler).

The best weapon against bacteria is heat, so taking advantage of our large 12 litre boiler, double the capacity of most undercounter dishwashers, and increasing the washing and rinsing times and temperatures, the demanding constraints requested by hospitals are able to be met.

To verify effective results, a series of analysis were carried out by a private testing house: Hygienicum®, to ascertain the real cleaning and disinfection effectiveness of dishwashers.
Hygienicum®, is a leading consulting institute for microbiology and hygiene, based in Graz, Austria. They are specialists in providing state-of-the-art solutions not only within the Foodservice industry.

- **Rinsed item temperature**

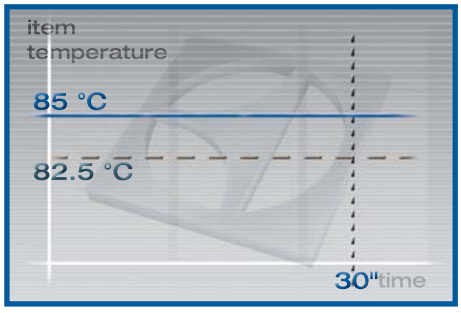

- **Rinse water consumption – l**

medical-*line*	
WT30E	WT65E
7,5	8,3

Hygienicum® successfully tested Electrolux dishwashers using a more rigid version of the Koller test procedure, performed with a bacteria known as enterococcus faecium, that is resistant up to 70 °C for 10 minutes. Evaluation of the test was in line with DIN 44 990 and DIN 10 510 norms.

State-of-the-art Electronics

Electronic Control Panel					
	On/Off	On/Off button		**P2**	Medium wash cycle recommended for medium soiled items
	Drain	Clean Cycle and/or Drain		**P3**	Long wash cycle recommended for heavily soiled items
	Temperature indicator	ON during washing		**Infinite (only WT65E)**	Infinite wash cycle recommended for soaking heavily soiled items
	Temperature indicator	ON during rinsing		**Hood lift (only WT65E)**	Automatic hood movement - up and down
	Temperature display	Actual wash tank temperature during washing or actual boiler temperature during rinsing		**Clean Cycle and/or Drain + P3**	Pressing these two buttons together empties the boiler or drains the wash pump
	P1	Short wash cycle recommended for lightly soiled items and glasses			

- Electronics provides notable benefits, whether for the operator, the owner, the engineer and even the consumer
- Self-cleaning cycle uses 8 litres of hot water for sanitisation of wash chamber after use
- Electronic display incorporates a number of "wash cycles" and "drainage cycles" performed counter to provide a quick check if dirty water is being changed often enough to provide clean plates
- Auto diagnostic display provided in the event of machine malfunction, with codified indication of the problem
- Boiler drain down facility to evacuate "stagnant" water for added hygiene in periods of non-use
- Precise rinse aid and detergent quantities can be set via the control panel, offering excellent money saving results
- Wash cycle times and temperatures can be easily personalised but it is the rinse that is the most critical part of the process, that really makes the difference: the dishwasher can really be tailored to the needs of the client, whether it be restaurant, nursing home or bar

• Examples of personalised rinse cycles

	Cycle 1	Cycle 2	Cycle 3	Notes
Standard set-up	84 °C for 16"	84 °C for 16"	84 °C for 16"	
Example 1 restaurant	84 °C	84 °C	65 °C	Mainly plates and crystal glasses
Example 2 nursing home	84 °C	84 °C	92 °C for 30"	Mainly plates and cycle for extra sanitisation
Example 3 pub serving snacks	65 °C	65 °C	84 °C	Mainly beer glasses and some plates

Performance

WT30

WT30

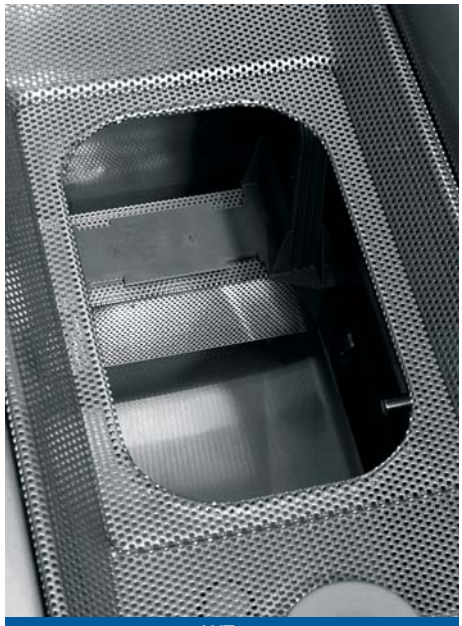

WT65

- **WT30E** and **WT65E** have both been engineered to offer the maximum in washing performance
- **WT30E** and **WT65E** incorporate 0.75 kW and 1.5 kW wash pumps, more powerful than average in their category, to ensure a strong washing action
- Powerful wash and rinse systems from both above and below
- **WT30E**'s 23 litre wash tank and **WT65E**'s 40 litre wash tank ensure an ample quantity of water to remain clean enough for a full washing session
- Both machines feature internally shaped hoods to prevent "dirty" drops of water falling on the clean items, once the wash cycle has finished
- Initial heat-up time is halved thanks to the pre-heating of the wash water via the high-powered rinse boiler – traditional dishwashers slowly heat up wash tank water using the lower powered wash tank heating elements
- For delicate items, **WT30E** incorporates a soft-start device that delays the potentially damaging strong impact of the wash cycle start up

Ergonomics

WT30

WT65

WT65

- **WT30E** door is counterbalanced with springs to lighten the load of opening and closing
- **WT65E** features a safety device that prevents the hood from suddenly closing in case of spring breakage, thus preventing operator injury
- Wash tank filters removable without taking out the washing and rinsing arms
- Pressed ergonomic door profile to protect delicate items when loading and unloading baskets
- Door handles are ergonomically designed to be grabbed from any position
- Carefully designed runner's assist loading and unloading of heavy baskets
- The irritating noise created mainly from the forceful wash water hitting the machine is minimised by strategically positioned insulation
- Quick pull-out stainless steel basket support
- Double walled hood ceiling and tank ensure a low noise level and a reduction in heat loss from the machine
- Open hood rear to prevent steam blasts to operators

Insulation	WT30	WT65 Standard	WT65 Insulated Manual Hood Lift	WT65 Insulated Automatic Hood Lift
Door	●			
Side Panels	●			
Top/Hood ceiling	●	●	●	●
Hood (side panels)			●	●
Db	< 60	< 70	< 65	< 65

Reliability

WT30

WT65

WT65

- **WT30E** and **WT65E** share many features in common that make them a safe long-term investment for heavy commercial use
- All main components made in heavy duty anti-corrosive 304 AISI stainless steel such as frame, doors, front, rear and side panels, basket runners, wash and rinse arms and nozzles

- **WT65E** has IPX5 hoseproof water protection whereas **WT30E** has IPX4 water protection. Both machines are completely enclosed at the rear to prevent filtration from insects, dirt and water
- High level of components such as Incoloy800 coated wash and rinse tank heating elements with internal thermal protection – if one branch of the element fails, the other two will continue working

- Full tank coverage stainless steel wash tank filters to prevent course debris entering the wash water system

Flexibility

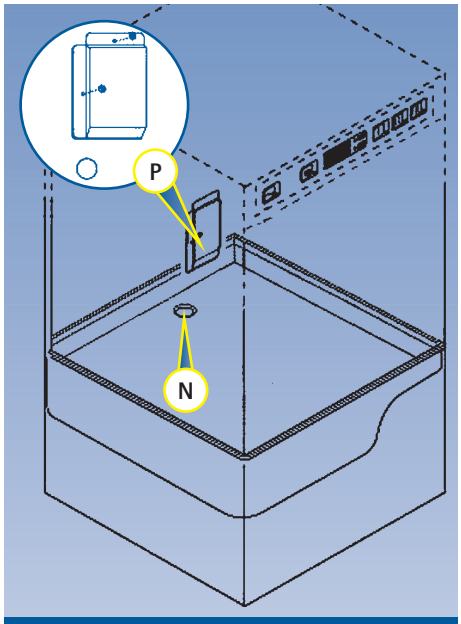

WT30E

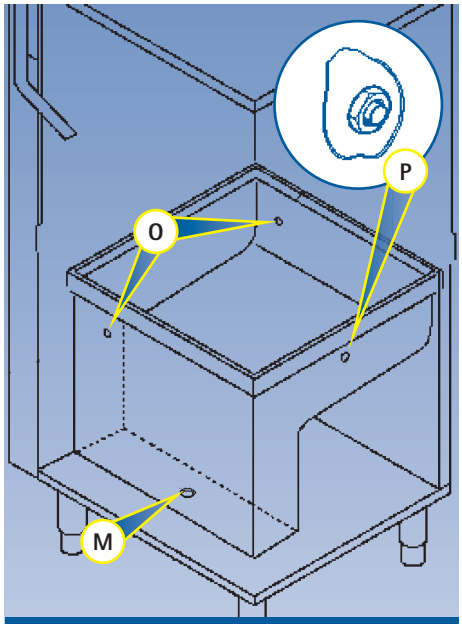

WT65E

- **WT30E** and **WT65E** are both designed to accept internal and external dosing equipment
- **N**: a ready-made impression to be perforated (ø 8 mm) for positioning the detergent concentration measuring sensor
- **M**: a ready-made hole (ø 22 mm) closed with a plug for positioning the detergent concentration measuring probe
- **O**: two plugged holes (ø 5 mm) for introducing the detergent
- **P**: a ready-made hole (ø 10 mm) closed with a plug, which may be used for mounting a liquid detergent injector

- Electrolux machines incorporate a number of features that provide absolute peace of mind for the buyer, especially if the dishwasher has to be moved or modified
- Machine delivered ready for electrical connection and operation
- External connection box allows rapid on-site changing of voltage
- **WT30E** can be converted on-site from singles phase to three phase and vice versa in the event that the machine is moved to another location

- Electronic control panel allows on-site personalisation of washing and rinsing cycle times and temperatures depending on the customers needs
- Drain pump can be added on-site if drain is not available directly under the machine
- All machines contain rinse aid doser and tube for container. Detergent doser available depending on model and as an on-site installation kit. Reliable and optimal dosage quantities are programmable via the electronic control panel

- All machines are prearranged to accept external dosing equipment, as for the electronic control panel and the connection points for pipes and probes

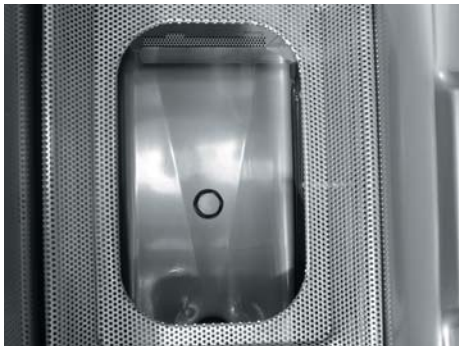

Continuous Water Softener

The Electrolux **CWS** (Continuous Water Softener) is available on both WT30 and WT65 and offers notable advantages:

- CWS guarantees non-stop dishwashing, no work flow interruption is needed for resin regeneration
- **all** water entering the dishwasher is softened, providing excellent results and reducing scale problems
- the salt filling cap is external, easier to load for the operator and complies with all water authority regulations, including WRAS
- the water softener is integrated with the atmospheric rinse system, maintaining high rinse water pressure and constant high temperature performance
- visual and audible warning to indicate salt container is empty and requires re-filling

The water softener incorporates two resin containers that automatically alternate between softening and regenerating, allowing continuous non-stop dishwashing.

While **container 2** is being regenerated, **container 1** is softening the water.

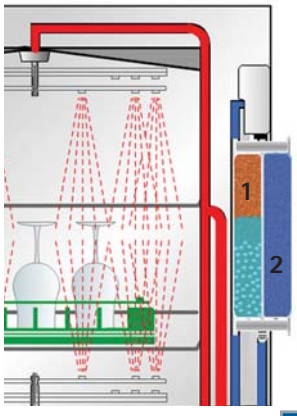

WT30E

- 45 baskets per hour capacity.
- 3 wash cycles: 90 seconds for light soiled items and glasses, 120 seconds for medium soiled items and 240 seconds for heavy soiled items.
- Clear entry for all plates, cups, utensils, trays, gastronorm containers, cutlery and glassware.
- Compact dimensions similar to a domestic appliance, suitable for undercounter or stand installations.
- Machine height variable from 850 mm with top to 820 mm without top.

WT30E

		Standard model	High powered model
	External dimensions - mm		
	Width	600	600
	Depth	600*	600
	Height	850	850
	Loading hole - mm		
	Width	500	500
	Depth	500	500
	Height	335	335
	N. of cycles	3	3
	Capacity (dishes/h)	720	720
Washing	Tank capacity - l	23	23
	Tank heating elements - kW	2,2	2,2
	Pump power - kW	0,75	0,75
Rinsing	Boiler capacity - l	12	12
	Boiler heating elements - kW	**4,5**	**6**
	Water consumption per rack - l	4	4
	Total Power - kW	**5,35**	**6,85**
	Voltage	400 V 3+N / 50 Hz convertible on site to 230 V 1+N,3 / 50 Hz	400 V 3+N / 50 Hz convertible on site to 230 V 1+N,3 / 50 Hz
Included accessories	Rinse booster pump	YES	YES
	Rinse aid dispenser	YES	YES
	Detergent connection	YES	YES
	Baskets	4 plastic boxes for cutlery 1 basket for 18 plates basket for 48 small cups or 24 cups	4 plastic boxes for cutlery basket for 18 plates basket for 48 small cups or 24 cups
Dealer fit optional accessories	Drain pump kit	on request	on request
	Detergent dispenser kit	on request	on request
Specific versions	Drain pump incorporated	specific model available	
	60 Hz	specific model available	
	Detergent dispenser incorporated	specific model available	
	medical-*line*	specific model available	
	Marine (USPH approved)	specific model available	
Specific country models	UK (WRC approved)	specific model available	
	Japan	specific model available	

* For CWS models depth is 612mm

WT65E

- 65 baskets per hour capacity.
- 4 wash cycles: 55 seconds for light soiled items and glasses, 75 seconds for medium soiled items and 120 seconds for heavy soiled items. Infinite cycle for continuous washing.
- Clear passing height of 410 mm for all tray washing, utensils, gastronorm containers, plates, cups, cutlery and glassware.
- WT65E incorporates 200 mm height adjustable feet for all-round external cleaning.
- Choice of various light lift hood solutions: standard with manual lift, insulated with manual lift or insulated with automatic lift.

WT65E

		Standard model	High powered model
	External dimensions - mm		
	Width	668	668
	Depth	756	756
	Height	1507	1507
	Loading hole - mm		
	Width	409	409
	Depth	590	590
	Height	560	560
	N. of cycles	4	4
	Duration cycles	55 / 75 / 120 / infinite	55 / 75 / 120 / infinite
	Capacity (dishes/h)	1180	1180
Washing	Tank capacity - l	40	40
	Tank heating elements - kW	3	3
	Pump power - kW	1,5	1,5
Rinsing	Boiler capacity - l	12	12
	Boiler heating elements - kW	**9**	**10,5**
	Water consumption per rack - l	4	4
	Total Power - kW	**10,6**	**12,1**
	Voltage	400 V 3+N / 50 Hz convertible on site to 230 V 3 / 50 Hz	400 V 3+N / 50 Hz convertible on site to 230 V 3 / 50 Hz
Hood	Single skin Hood with insulated ceiling	YES	YES
Included accessories	Rinse booster pump	YES	YES
	Rinse aid dispenser	YES	YES
	Detergent connection	YES	YES
	Baskets	yellow basket for 18 plates	yellow basket for 18 plates
		brown basket for cutlery	brown basket for cutlery
		blue basket for 48 small cups or 24 cups	blue basket for 48 small cups or 24 cups
Dealer fit optional accessories	Drain pump kit	on request	on request
	Detergent dispenser kit	on request	on request
Specific versions	60 Hz	specific model available	specific model available
	Double skin insulated hood	specific model available	specific model available
	Automatic double skin hood	specific model available	specific model available
	medical-*line*		specific model available
	Marine (USPH approved)	specific models available	
Specific country models	UK (WRC approved)		specific model available
	Asia (different mix of baskets)		specific model available

rebus

BUILDING THE future

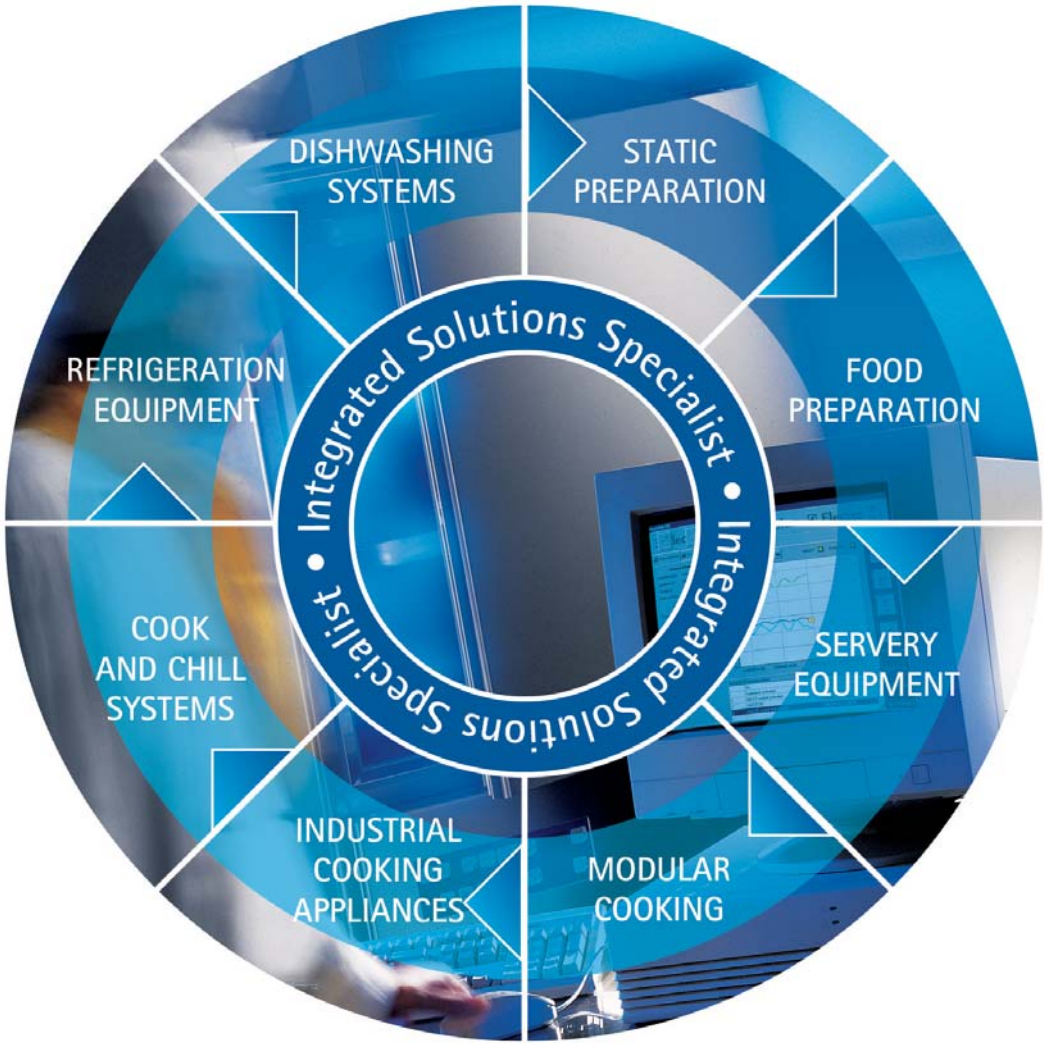

CSQ IQNet CERTIFIED MANAGEMENT SYSTEM CSQ eco ISO 14001

Electrolux

www.electrolux.com/foodservice

Share more of our thinking at www.electrolux.com

The Company reserves the right to change specifications without notice.

9JETGU